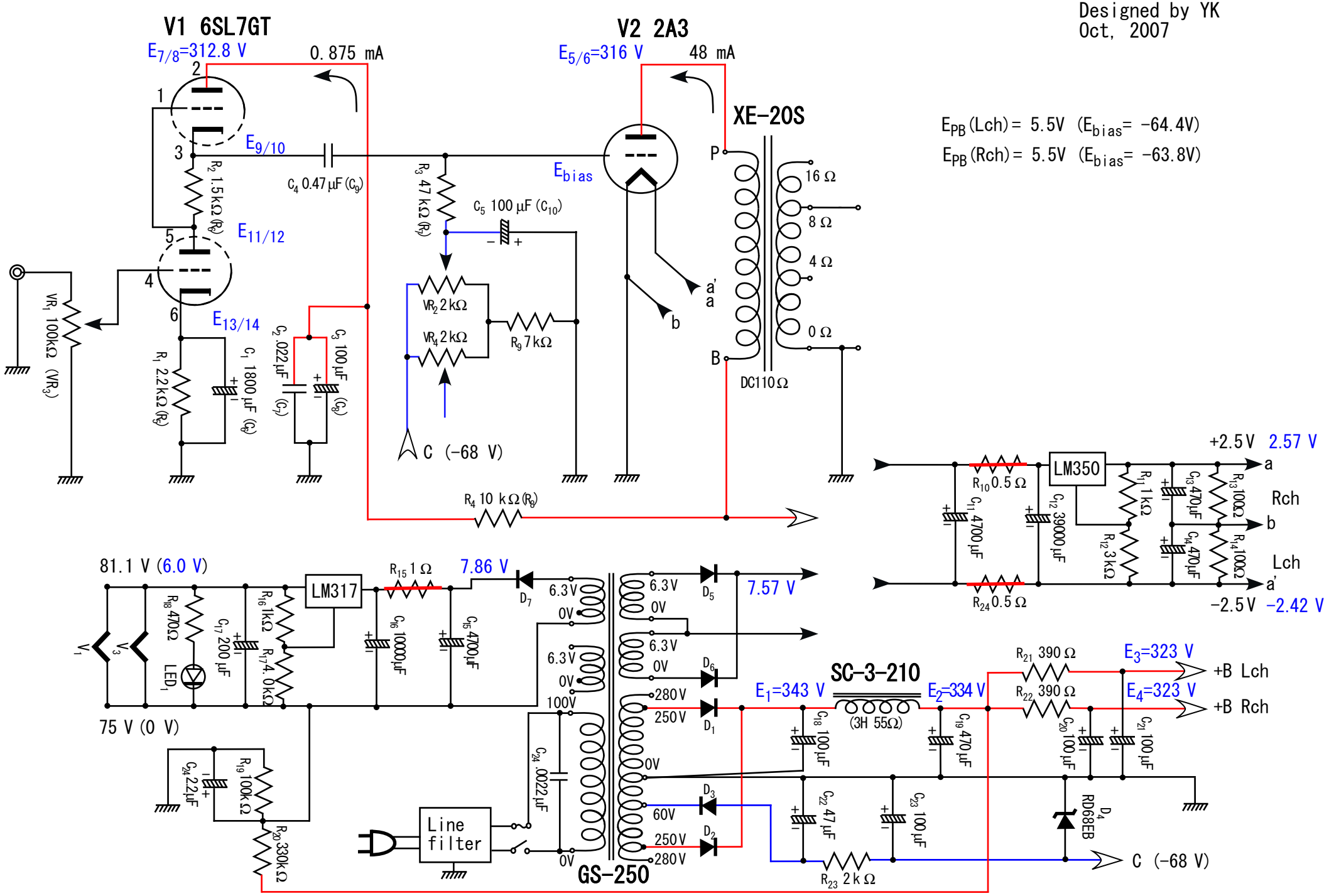
Designed by YK
Oct, 2007
V1 6SL7GT
V2 2A3
XE-20S
E7/8=312.8 V
0.875 mA
E5/6=316 V
48 mA
E9/10
E11/12
E13/14
Ebias
EPB(Lch)= 5.5V (Ebias= -64.4V)
EPB(Rch)= 5.5V (Ebias= -63.8V)
VR1 100kΩ (VR3)
R1 2.2kΩ (R5)
C1 1800 μF (C6)
R2 1.5kΩ (R8)
C2 .022μF (C7)
C3 100 μF (C8)
C4 0.47μF (C9)
R3 47 kΩ (R7)
C5 100 μF (C10)
VR2 2kΩ
VR4 2kΩ
R9 7kΩ
C (-68 V)
R4 10 kΩ (R8)
16 Ω
8 Ω
4 Ω
0 Ω
DC110Ω
LM350
R10 0.5 Ω
R11 1kΩ
R12 3kΩ
R13 100Ω
R14 100Ω
C11 4700μF
C12 39000μF
C13 470μF
C14 470μF
R24 0.5 Ω
+2.5V 2.57 V
Rch
-2.5V -2.42 V
81.1 V (6.0 V)
75 V (0 V)
LM317
R15 1 Ω
7.86 V
R16 1kΩ
R17 4.0kΩ
R18 470Ω
LED1
C16 10000μF
C17 200 μF
C15 4700μF
D7
7.57 V
D5
D6
D1
D3
D2
6.3V
0V
280V
250V
100V
60V
SC-3-210
(3H 55Ω)
E1=343 V
E2=334 V
E3=323 V
E4=323 V
R21 390 Ω
R22 390 Ω
+B Lch
+B Rch
C18 100μF
C19 470μF
C20 100μF
C21 100μF
C22 47μF
C23 100μF
R23 2kΩ
D4 RD68EB
C (-68 V)
C24 22μF
R19 100kΩ
R20 330kΩ
C24 .0022μF
Line filter
GS-250